© GRIMM AND PARKER, P.C. 2014

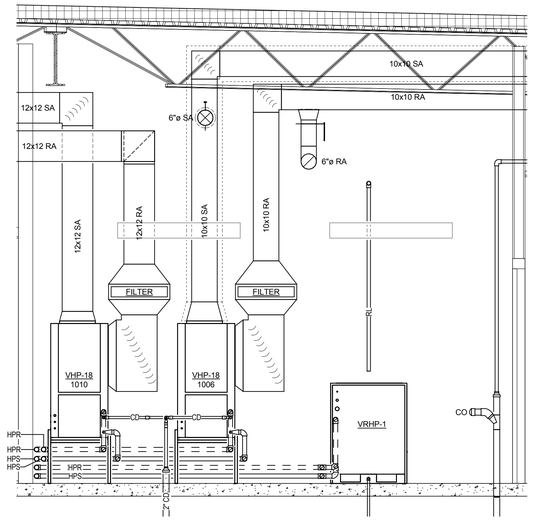

5 | 1 M-4.4 MECH 1206 SECTION 2
SCALE: 1/2" = 1'-0"

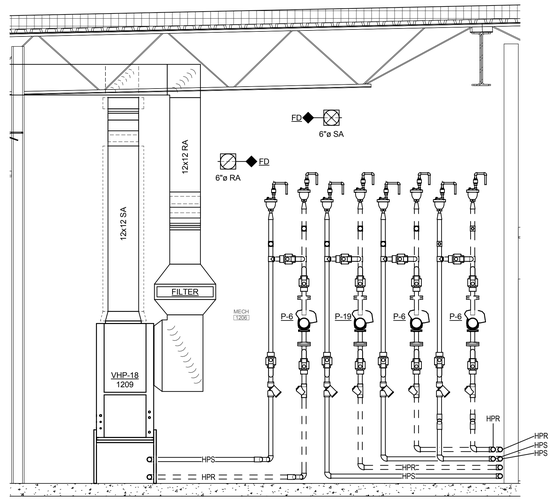

2 | 1 M-4.4 MECH 1206 SECTION 1
SCALE: 1/2" = 1'-0"

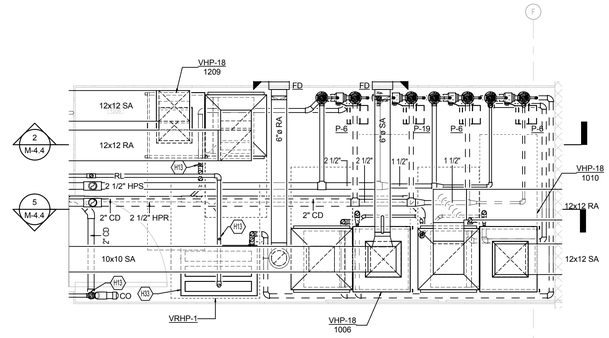

1 | 1 M-1.1 1206-MECH
SCALE: 1/2" = 1'-0"

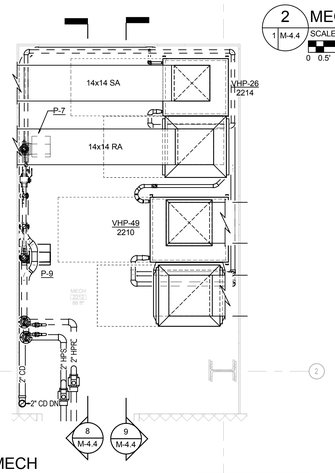

3 | 1 M-1.4 2212-MECH
SCALE: 1/2" = 1'-0"

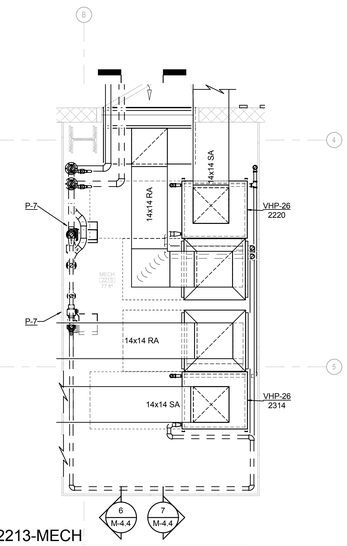

4 | 1 M-1.4 2213-MECH
SCALE: 1/2" = 1'-0"

TAGGED NOTES	
H13	2" CD PIPE DOWN TO BELOW SLAB.
H33	REFER TO WATER SOURCE VRF HEAT PUMP REFRIGERANT PIPING SCHEMATIC ON SHEET M7.0 FOR REFRIGERANT PIPING REQUIREMENTS.

GENERAL MECHANICAL ENLARGED PLAN NOTES	
A	REFER TO WATER SOURCE HEAT PUMP SCHEDULE ON SHEET M10.0 FOR ALL HPS/HPR PIPING RUNOUT SIZES.
B	REFER TO WATER SOURCE HEAT PUMP SCHEDULE ON SHEET M10.0 FOR ALL CONDENSATE PIPING RUNOUT SIZES.
C	SEAL ALL FLOOR SLAB AND WALL PENETRATIONS AIR AND WATER TIGHT. ALL PENETRATIONS ARE TO BE SEALED TO MINIMIZE SOUND TRANSMITTANCE.
D	REFER TO VERTICAL HEAT PUMP INSTALLATION DETAIL ON SHEET M7.0 FOR ALL PIPING REQUIREMENTS FOR VERTICAL UP FLOW AND DOWN FLOW UNITS. PROVIDE ALL PIPING COMPONENTS IN DETAIL WHETHER SHOWN OR NOT IN PLANS, ENLARGED PLANS, SECTIONS, AND ISOMETRICS.
E	PROVIDE SA AND RA DUCT TRANSITIONS AS REQUIRED FOR INLET AND OUTLET OF ALL WATER SOURCE HEAT PUMPS.
F	REFER TO PIPING SHCEMATICS, M6.0 & M6.1, FOR FURTHER DETAIL/INFORMATION.

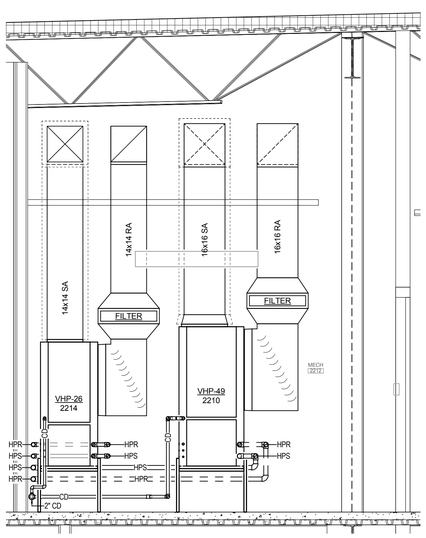

9 | 3 M-4.4 MECH 2212 SECTION 2
SCALE: 1/2" = 1'-0"

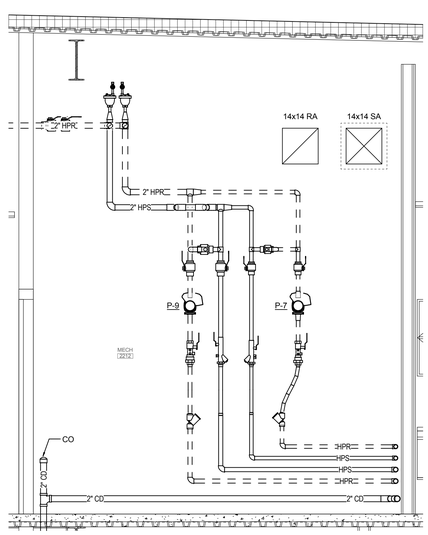

8 | 3 M-4.4 MECH 2212 SECTION 1
SCALE: 1/2" = 1'-0"

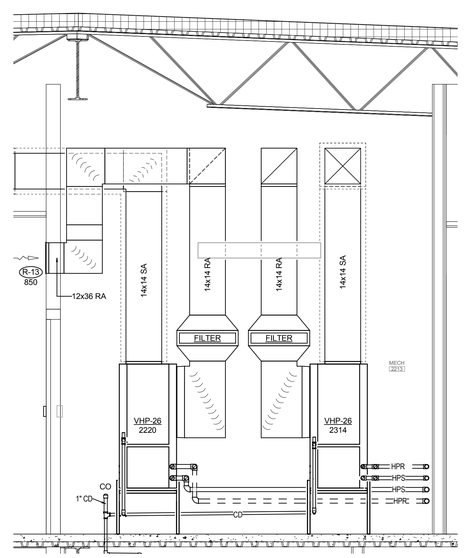

7 | 4 M-4.4 MECH 2213 SECTION 2
SCALE: 1/2" = 1'-0"

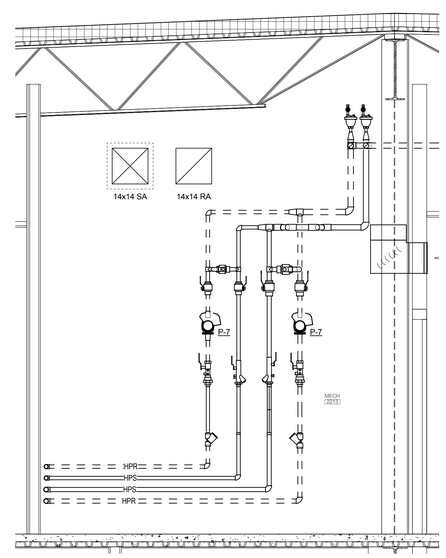

6 | 4 M-4.4 MECH 2213 SECTION 1
SCALE: 1/2" = 1'-0"

2429 Members Way
Lexington, Ky 40504
Tel: 859.253.0892
http://www.cmtaegis.com/
CMTA CONSULTING ENGINEERS

11720 Beltsville Drive
Suite 600
Calverton, MD 20705
Tel: 301.595.1000
www.grimmandparker.com
G+P GRIMM AND PARKER

GP# 21553

ENLARGED PLANS
HOLABIRD ACADEMY PK-8
CITY OF BALTIMORE, MARYLAND

DATE	DESCRIPTION

M-4.4
03/13/2017
BID SET

© GRIMM AND PARKER, P.C. 2014